Henley Slope Arm Sectional

Left Arm Sofa - 79.5”

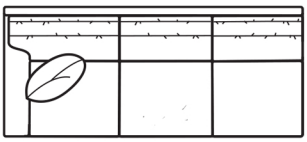

Right Arm Sofa - 79.5”

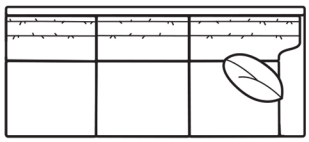

Left Arm Loveseat 54.5”

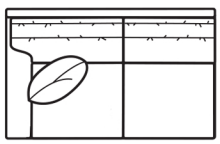

Right Arm Loveseat 54.5”

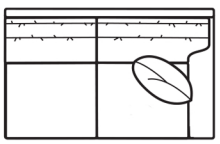

Armless Chair - 25”

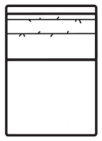

Right Arm Corner Sofa - 90.5”

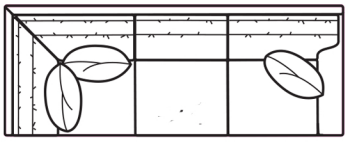

Left Arm Corner Sofa - 90.5”

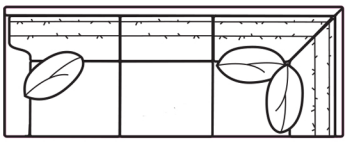

Corner 36”

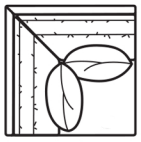

Round Corner

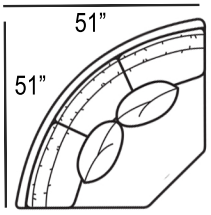

Left Chaise 30” X 64.5

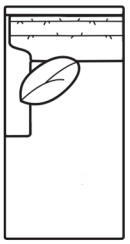

Right Chaise 30” X 64.5

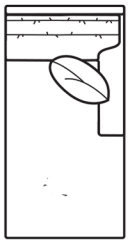

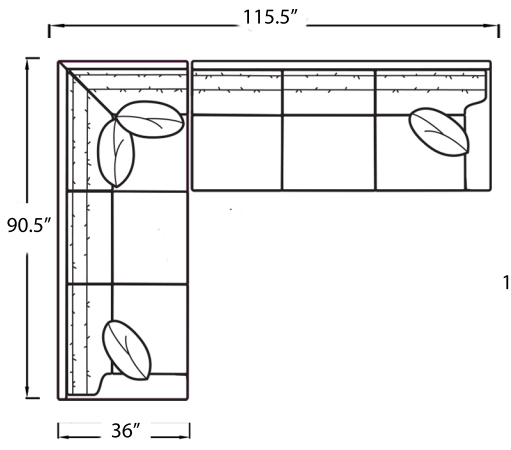

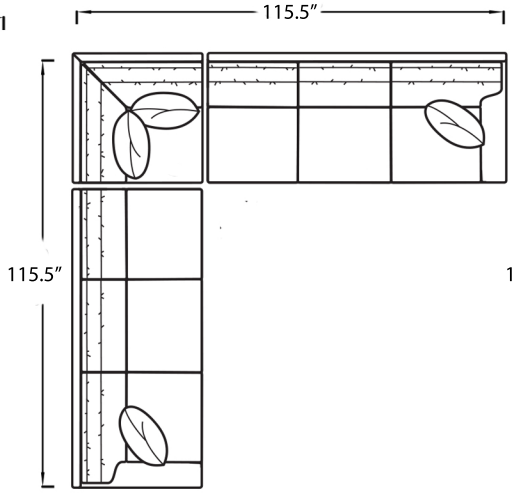

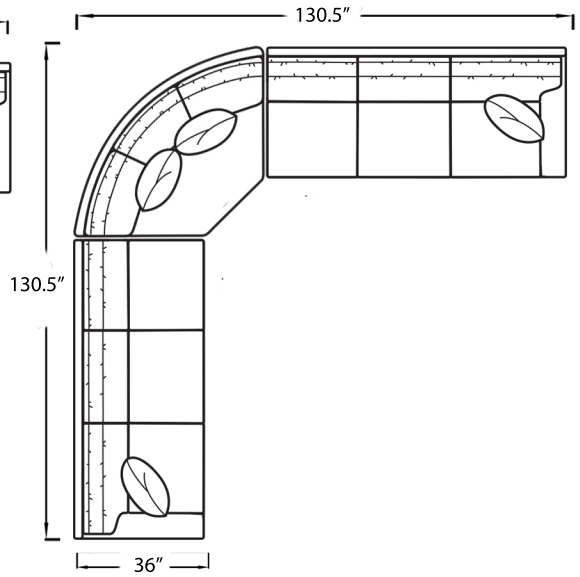

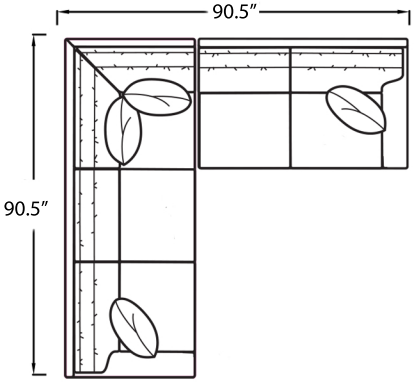

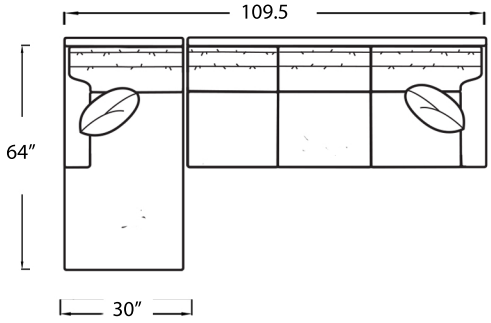

Configuration Confirmed _____